附逆止閥行控型迴轉油壓缸 >>> RS 高速短型

ROTATING HYDRAULIC CYLINDER
WITH STROKE CONTROL AND SAFETY DEVICE

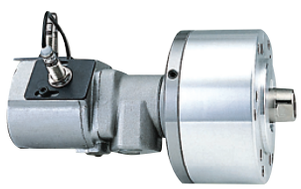

- 短型，高速，行程控制型迴轉油壓缸。
- 感應式近接開關，行程調整容易，可確認油壓缸正確作動。
- 內建逆止閥自鎖機構及壓力洩壓閥。
- 安裝時可由後端鎖固之。
- For short form, high speed and stroke control.
- To ensure safe power chuck operations by conforming movement of the piston in the cyliner.
- Built-in safety check valves and pressure relief valves.
- Can screw it from the rear end of the cylinder when mounting.

■ 洩油孔配管務必單獨接回油壓槽，以避免產生背壓。

■ The drain port should be independently connected to oil tank to avoid back pressure.

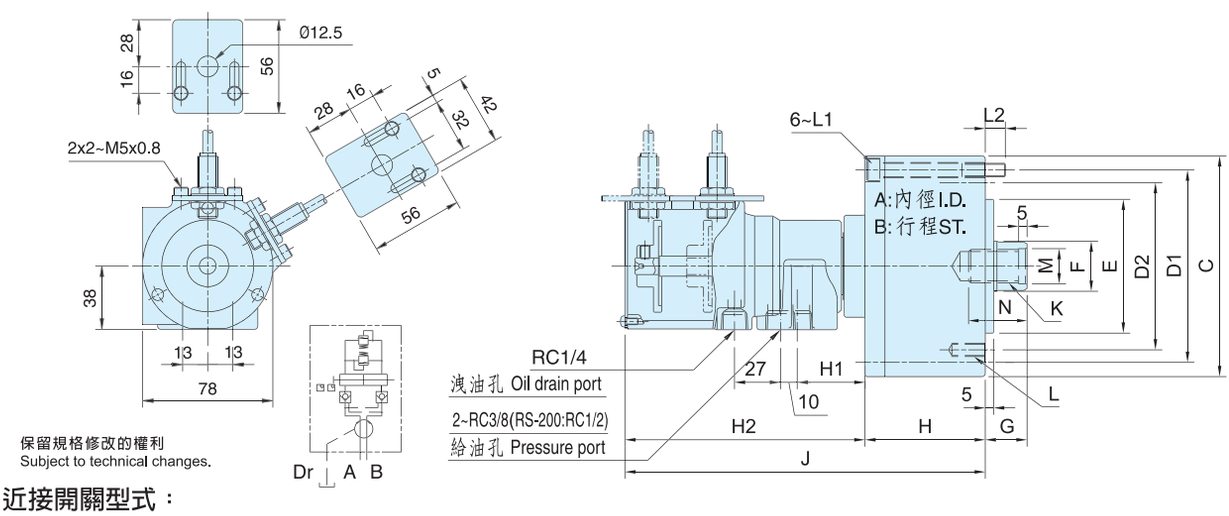

保留規格修改的權利
Subject to technical changes.

近接開關型式：

Proximity sensor : Model TLX-12N02E1-C(KFPS) DC 12~24V 200mA NPN

規格 Spec. / 型號 Model	活塞面積 Eff. piston area cm² 押側 Extend	拉側 Retract	行程 mm Piston stroke	最高迴轉數 min⁻¹(r.p.m) Max. speed	最高使用壓力 MPa Max. pressure (kgf/cm²)	I kg·m² Moment of inertia	重量 kg Weight
RS-75	43.0	37.1	15	6000	4.0 (40)	0.01	3.4
RS-100	77.4	71.5	20			0.04	4.9
RS-125	121.6	113.1	25			0.05	7.4
RS-150	175.6	160.8	30	5500		0.10	10.7
RS-200	313.0	290.4	35			0.29	15.9

寸法 Size / 型號 Model	A	B	C	D1	D2	E h7	F	G max.	G min.	H	H1	H2	J	K	L	L1	L2	M H8	N
RS-75	75	15	107	90		65	30	45	30	57	42	145	202	M20x2.5	6~M8x16	M8x60	12	21	35
RS-100	100	20	132	115	100	80			25	72			217		6~M10x20	M8x75			
RS-125	125	25	160	140	130	110	35	50		82	41	144	226	M24x3.0	6~M12x20	M8x85		25	45
RS-150	150	30	190	170			45	55		95	39	142	237	M30x3.5	12~M12x24	M10x100	16	31	
RS-200	200	35	245	220	145	120	55	70	35	115	36	142.5	257.5	M36x4.0	12~M16x30	M10x125	21	37	60